LITHIUMVALLEY

YOUR SAFE ENERGY

Version:V1.1

20-year Design Lifespan

A+ Grade Lithium Iron Phosphate Cells

MV2700-5000H-24G 2700kW-5015kWh

All-in-One C&I BESS

Full Liquid-Cooled Temperature Control System

Active Balancing BMS Technology

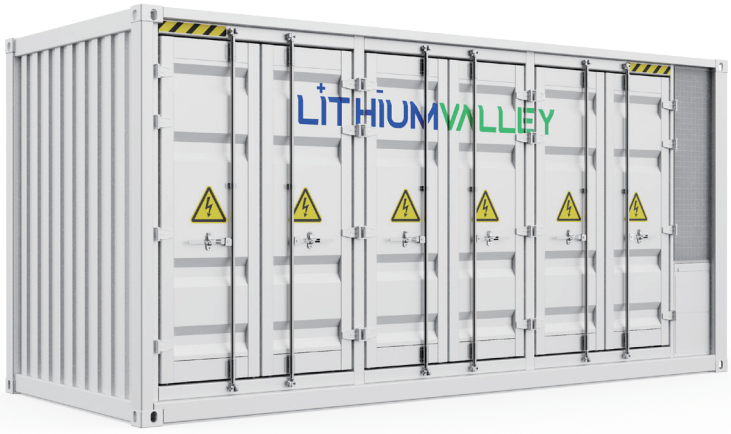

Features and Advantages

Safety Technology

- A+ grade lithium iron phosphate
- The system is configured with a multi-level fuse protection
- Built-in aerosol fire extinguishing systems at the package and rack levels

Easy to Install and Use

- Highly integrated for ease of transportation installation and deployment
- Modular design with flexible system capacity configuration

More Reliable

- The system is rigorously designed and tested to operate stably under various conditions
- Equipped with protections against overcharge over-discharge and over-temperature to prevent accidents

Energy Management System

- Emergency power supply
- Peak shaving
- Demand mitigation
- Self-consumption
- Micro-grids
- Price arbitrage

System Technical Parameters

Model	MV2700-5000H-24G
Battery Data	
Nominal Energy	5015KWh
Nominal Voltage	1331.2V
Battery Model	SC104G314-04
Battery Chemistry	Lithium Iron Phosphate ($LiFePO_4$)
Cycle Life	≥8000(@25°C, 0.5P/0.5P)
Cell Specification	3.2V/314Ah
Battery Pack Energy	104.4kWh
String Configuration	1P416S
Number of Strings	12
Operating Voltage	1164.8V - 1497.6V
Rated Charging Power	0.5P
Rated Discharging Power	0.5P
Safety	
Fire Extinguishing System	Aerosol , Water sprinkler system
PCS Data	
Rated Power	2700kW
Please refer to the PCS section for more details.	
General	
Dimension(WxDxH)	6058 x 2438 x 2896 mm
Weight	Approximately 43000kg
IP Rating	IP54
Cooling Method	Liquid cooling
Operating Temperature	-20°C - +50°C
Storage Temperature	-20°C - +45°C
Relative Humidity	15% - 95%(Non-condensing)
Max. Operating Altitude	≤3000m
Communication Interfaces	LAN/CAN/RS485
Compliance	IEC 62619, IEC/EN 61000, UN 3536, MSDS

* The actual product may have slight differences from some promotional videos or pictures. Please refer to the actual product. Unless otherwise specified, the data on this page are all from our company's laboratory. The data may have errors due to changes in the objective environment.
* The specifications are subject to change without prior notice.

Power Conversion System



PCS Features

This product is a modular converter specifically designed for 1500V high-voltage energy storage systems, with rated power options of 450kW/430kW/400kW. It serves as the core power conversion unit within the energy storage setup. Featuring a three-level topology, it supports bidirectional power flow and wide battery voltage range. With an IP65 protection rating, integrated BMS, and liquid cooling, it meets the demands of diverse application scenarios and is compatible with both AC-DC integrated and independent AC cabinet string configurations.

(1) PCS Converter enables the AC/DC conversion between the grid and batteries, facilitating bidirectional power flow. It acts as the primary actuator and core component of an energy storage system.

(2) It supports multi-unit parallel operation, offering excellent scalability.

(3) It supports active and reactive power regulation functions.

(4) It integrates BMS functionality, simplifying system integration design.

PCS Technical Parameters

Model	INPPCS-450/0.69-W-13-A1
DC Side Parameters	
Number of Input Circuits	2
DC Voltage Range	DC 1000V - 1500V(1080V - 1500V (Rated Output))
Rated DC Current	208.4A*2
Rated DC Power	450 kW
Voltage Regulation Accuracy	≤ ±2%
Current Regulation Accuracy	≤ ±3%
Voltage Limiting Feature	Yes
Current Limiting Feature	Yes

PCS Technical Parameters

Model	INPPCS-450/0.69-W-13-A1
AC On-Grid Parameters	
Rated Output Power	450 kW
Overload Capability	1.1 times long-term, 1.2 times for 1 minute
Rated Voltage	690 V
Rated Output Current	376.5 A
AC Connection Type	Three-Phase, Three-Wire
Isolation Type	Non-Isolated
Grid Voltage Range	690V (-15% to +10%)
Grid Frequency Range	50Hz/60Hz ±2.5Hz
Total Current Harmonic Distortion (THDi)	≤ 3%(At Rated Load)
Power Factor (PF)	-0.99 to +0.99
DC Current Injection	≤ 0.5%
Charge/Discharge Transition Time	< 100 ms
AC Off-Grid Parameters	
AC Grid Voltage	AC 690V
AC Voltage Range	AC 690V ±3%
Grid Frequency	50Hz / 60Hz
Grid Output Voltage THDU	≤ 3%(With linear load)
Other Parameters	
Maximum Conversion Efficiency	≥ 99%
Allowed Coolant Inlet Temperature	-30°C to 60°C(Derating applied above 55°C)
Allowed Relative Humidity	≤ 95%(Non-condensing)
Acoustic Noise Level	≤ 70 dB
Ingress Protection (IP) Rating	IP65
Operating Altitude	< 4000 m(Derating above 2000 m: 1% per 100 m increase)
Cooling Method	Liquid Cooling(50% Ethylene Glycol Aqueous Solution)
Coolant Flow Rate Requirement	20 L/min
Liquid Cooling Interface	CQC18(Quick-connect coupling)
Coolant Inlet/Outlet Pressure Drop	60 kPa
BMS Communication Interface	CAN or RS485(120Ω resistor to be confirmed separately)
EMS Communication Interface	Ethernet or RS485
Enclosure Dimensions (W x H x D)	750 mm x 220 mm x 1300 mm
Weight	200 kg
BCU Configuration	Gaote

Liquid Cooling Unit Parameters

Model	EMW600FCNS2E
Dimensions Weight & Installationb	
Dimensions (W x D x H)	2230×580×1600mm
Weight (without coolant)	550kg
Installation Method	Floor-mounted
Application Environment	Outdoor Type
Note: Outlet/Inlet Connection Type	Battery side: 2.5-inch flange, PCS side: 2-inch flange
Environmental Protection & Performance	
Operating Ambient Temperature Range	-30 to +55°C
Storage Ambient Temperature Range	-40 to +70°C
Operating Altitude	0~4000m (For every 1000m above 1000m, derate capacity by 5%)
Noise Level	≤85dB(A)
IP Protection Rating	IP X5
Refrigerant	R513A
Coolant (Secondary Fluid)	50% Ethylene Glycol Water Solution
RoHS2.0 Certification	Yes
Cooling/Heating Capacity	
Mechanical Cooling Capacity @W18/L45 (Battery side)	57kW
Free Cooling Capacity @W55/L45 (PCS side)	55kW
Heating Capacity W10 (Battery side)	26kW
Coolant Flow Rate	
Rated Coolant Flow Rate(Battery side)	500 L/min @ 150kPa
Rated Coolant Flow Rate (PCS side)	200 L/min @ 150kPa
Power Consumption	
Rated Cooling Power Consumption Battery side W18/L45,PCS side W55/L45	41kW
Rated Cooling Current Battery side @W18/L45,PCS side @W55/L45	70A
Rated Heating Power Consumption(Battery side)	24kW
Rated Heating Current (Battery side)	37A
Maximum Operating Power Consumption	42kW
Power Supply Specifications	
Rated Operating Voltage	380V, 3-phase, 50/60Hz
Supported Voltage Range	380V ±15%, 3-phase, 50/60Hz ±3Hz
Maximum Operating Current	88A

Electrical Diagram

2.7MW / 5MWh System(MV2700-5000L-24G)

2-hour ESS

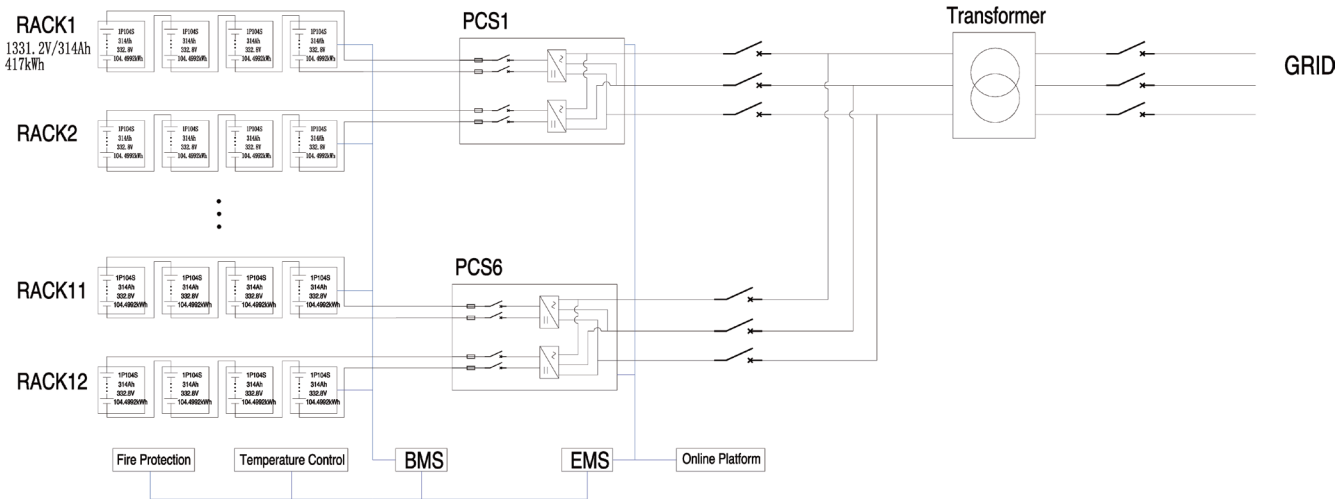

Factory Address: No. 31, Shengye Road, Huangjiang Town, Dongguan
info@lithiumvalley.com sales@lithiumvalley.com
www.lithiumvalley.com

LITHIUMVALLEY